Features:

1. Chip material: GaP/GaP
2. Emitted color : bright red
3. Lens Appearance : red diffused
4. Low power consumption.
5. High efficiency.
6. Versatile mounting on P.C. Board or panel.
7. Low current requirement.
8. T-1 3/4 type package

Applications:

1. TV set
2. Monitor
3. Telephone
4. Computer
5. Circuit board

Package dimensions:

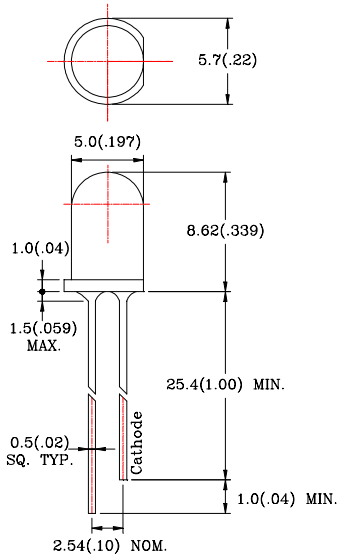

Notes:

1. All dimensions are in millimeters (inches).
2. Tolerance is ±0.25mm (0.01”) unless otherwise specified.
3. Lead spacing is measured where the leads emerge from the package.
4. Specifications are subject to change without notice.

Absolute maximum ratings(Ta=25℃)

Parameter	Symbol	Rating	Unit
Power Dissipation	Pd	40	mW
Forward Current	I_F	15	mA
Peak Forward Current*[1]	I_{FP}	50	mA
Reverse Voltage	V_R	5	V
Operating Temperature	Topr	-40℃~80℃	
Storage Temperature	Tstg	-40℃~85℃	
Soldering Temperature	Tsol	260℃(for 5 seconds)	

*[1]Condition for I_{FP} is pulse of 1/10 duty and 0.1msec width.

Electrical and optical characteristics(Ta=25℃)

Parameter	Symbol	Condition	Min.	Typ.	Max.	Unit
Forward Voltage	V_F	I_F=20mA	-	2.2	2.6	V
Luminous Intensity	Iv	I_F=20mA	-	5	-	mcd
Reverse Current	I_R	V_R=5V	-	-	100	μA
Peak Wave Length	λp	I_F=20mA	-	700	-	nm
Dominant Wave Length	λd	I_F=20mA	-	650	-	nm
Spectral Line Half-width	Δλ	I_F=20mA	-	100	-	nm
Viewing Angle	$2\theta_{1/2}$	I_F=20mA	-	40	-	deg

Typical electro-optical characteristics curves

Fig.1 Relative intensity vs. Wavelength

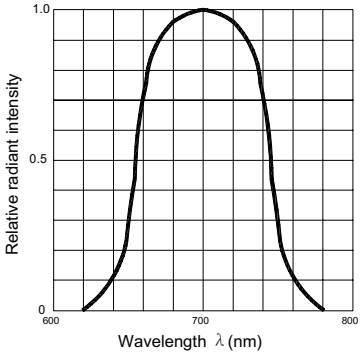

Fig.2 Forward current derating curve vs. Ambient temperature

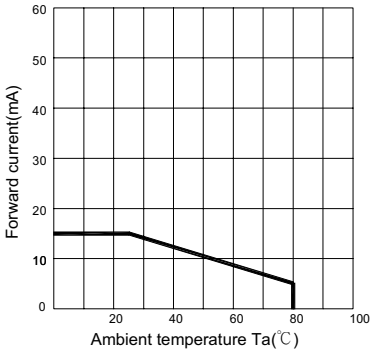

Fig.3 Forward current vs. Forward voltage

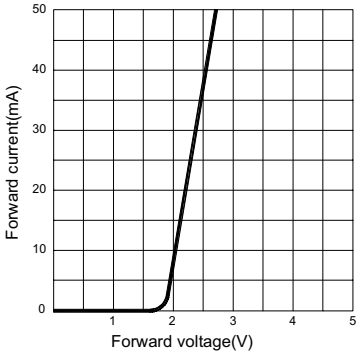

Fig.4 Relative luminous intensity vs. Ambient temperature

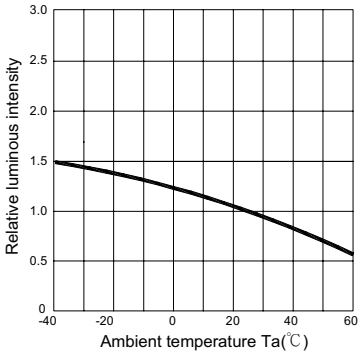

Fig.5 Relative luminous intensity vs. Forward current

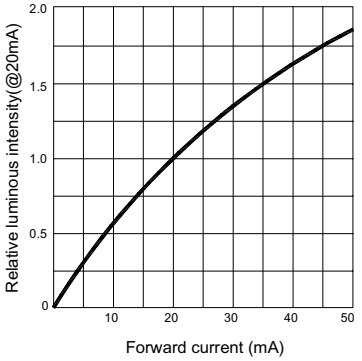

Fig.6 Radiation diagram