QUARTZ CRYSTALS MHz range SMD-version

model	KX - 9A
frequency range	8,0 ~ 300,0 MHz
mode	fundamental, 3rd overtone, 5th overtone
operating temperature	standard -20° ~ + 70°C available -40° ~ + 85°C (=KX-9AT) available -40° ~ +105°C (=KX-9AE)
frequency tolerance at +25°C	standard ± 30 ppm available ± 10 ~ ± 50 ppm
temperature tolerance -20° ~ + 70°C -40° ~ + 85°C -40° ~ +105°C	 standard ± 50 ppm, available ±10 ~ ± 50 ppm standard ±100 ppm, available ±20 ~ ± 100 ppm standard ±120 ppm, available ±30 ~ ± 120 ppm
load capacitance C_L	standard 16 pF available 10 ~ 20 pF
series resonance R_1 max.	fundamental 8,0 ~ 9,99 MHz 150 Ohm 10,0 ~ 12,0 MHz 100 Ohm 12,1 ~ 16,0 MHz 80 Ohm 16,1 ~ 20,0 MHz 60 Ohm 20,1 ~ 50,0 MHz 40 Ohm 50,1 ~ 130,0 MHz 30 Ohm 3rd overtone 70,0 ~ 300,0 MHz 80 Ohm 5th overtone 120,0 ~ 250,0 MHz 80 Ohm
aging (first year)	± 2 ppm
shunt capacitance C_0 max.	5,0 pF
drive level in mW max.	0,05
contents of reel	1000 pcs.
RoHS	since production start
part no.	12.89000 ~ 12.89199

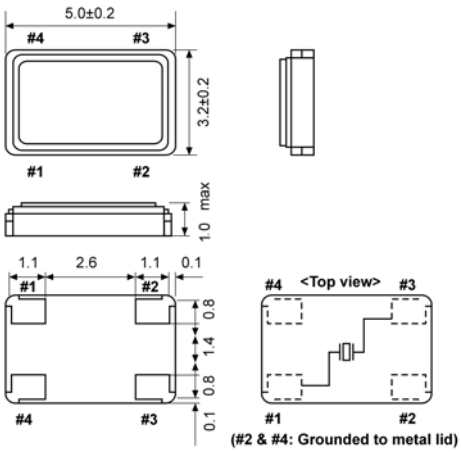

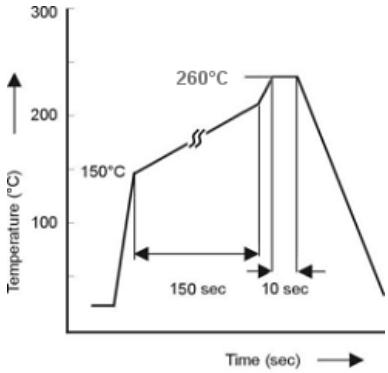

soldering condition

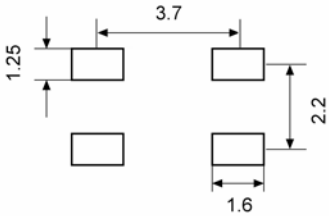

suggested soldering pad

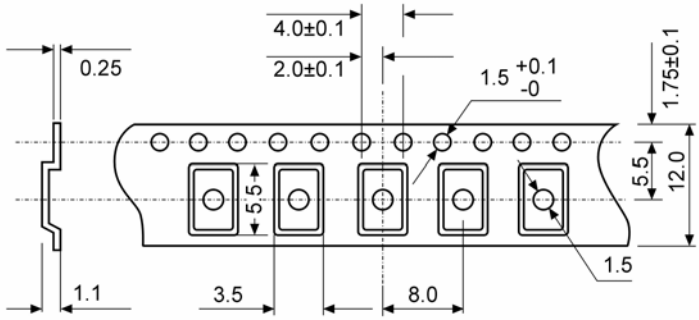

(mm) reel diameter 178 mm

GEYER ELECTRONIC Lochhamer Schlag 5 82166 Gräfelfing/München
Tel. 089/546868-0 Fax 089/546868-91 quartz@geyer-electronic.de

04.07.2007